KB 323 Bar cabinet

Standard

- Glossy painted in accordance with RAL
- Moveable glass panel at front (safty glass)
- 1 glass shelf in the middle compartment and 3 glass shelves per side compartment

Optionally

- Semi-matt painted in accordance with RAL
- Interior lighting (LED 3 Watt)
- With castors
- Built-in refrigerator (31 liter)
- Additional glass shelves
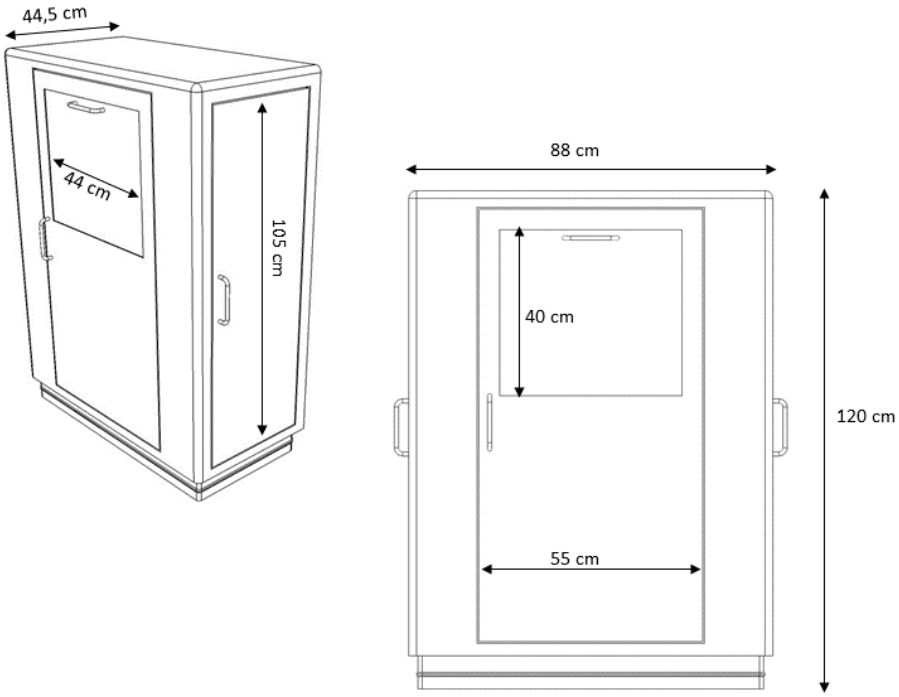
Dimension